# Type 435Q/436Q Slotted Galvanized Steel Grate Spec Sheet

## Type 435Q Slotted Galvanized Steel Grate

*part no. 31550*

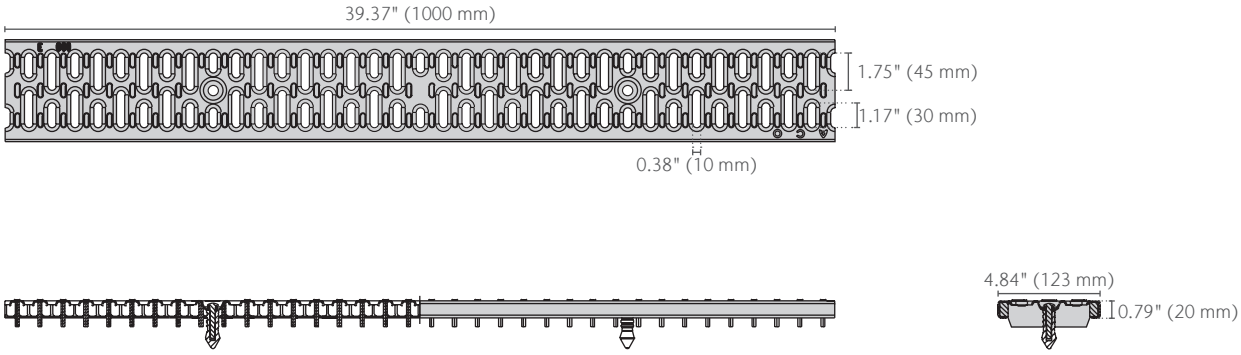


## Type 436Q Slotted Galvanized Steel Grate

*part no. 31551*

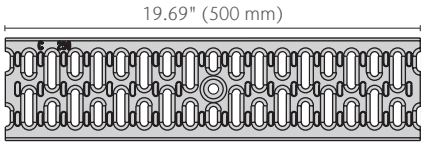


| Product Name | Part No. | Length in (mm) | Width in (mm) | Weight lbs |
|---|---|---|---|---|
| Type 435Q Slotted Galvanized Steel Grate | **31550** | 39.37 (1000) | 4.84 (123) | 13.7 |
| Type 436Q Slotted Galvanized Steel Grate | **31551** | 19.69 (500) | 4.84 (123) | 6.8 |
| QuickLok® Locking Bar | **02899** | - | - | 0.2 |
| QuickLok® Grate Removal Hook | **01318** | - | - | 0.6 |

# Type 435Q/436Q Slotted Galvanized Steel Grate Spec Sheet

## QuickLok® Locking Mechanism

ACO QuickLok is a patented boltless locking system. Grates are removed and replaced with the minimum time and effort for ease of maintenance.

The unique design of ACO QuickLok includes a locking stud fixed into the grate which clips into a locking bar.

The QuickLok locking stud is made from stainless steel and high-density nylon. The locking bar and locking spring are stainless steel for use in both general purpose and corrosive environments.

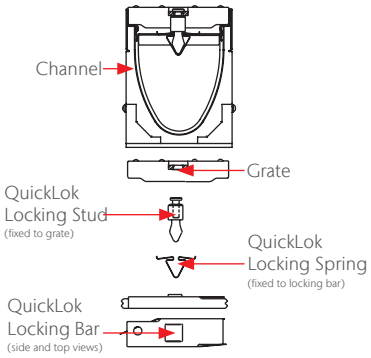


## Specification Summary

### General

The surface drainage system shall be ACO Drain K100, KS100, H100-8, H100-10, H100K-8 or H100KS-8 channels complete with ACO Type 435Q/436Q Slotted Galvanized Steel grate with QuickLok locking as manufactured by ACO, Inc. or similar approved.

### Installation

The trench drain system and grates shall be installed in accordance with the manufacturer's installation instructions and recommendations.

### Materials

The covers shall be manufactured from galvanized steel and have minimum properties as follows:

- 16 gauge galvanized steel
- Intake area of 17.6 in$^2$ (113.5 cm$^2$) per half-meter of grate

Type 435Q has a width of 4.84" (123 mm) and length of 39.37" (1000 mm). Type 436Q has a width of 4.84" (123 mm) and length of 19.69 "(500 mm). Slots measure 1.75" (45 mm) by 0.38" (10 mm) and 1.17" (30 mm) by 0.38" (10 mm).

Slip-resistant:
BPN > 24 based on Pendulum Test

Australian Standard AS 3996 - 2006 Clause 3.3.6:
max slot length dependent on slot width for grates that are deemed Bicycle Tire Penetration Resistant.

EN1433 Load Class E
134,885 lbs – 2,785 psi

**ACO, Inc.**

© September 2026 ACO, Inc.
All reasonable care has been taken in compiling the information in this document. All recommendations and suggestions on the use of ACO products are made without guarantee since the conditions of use are beyond the control of the company. It is the customer's responsibility to ensure that each product is fit for its intended purpose and that the actual conditions of use are suitable. ACO, Inc. reserves the right to change products and specifications without notice.

info@acousa.com
www.acousa.com