Type 679Q Mosaic Ductile Iron Grate Spec Sheet

Type 679Q Mosaic Ductile Iron Grate

part no. 93957

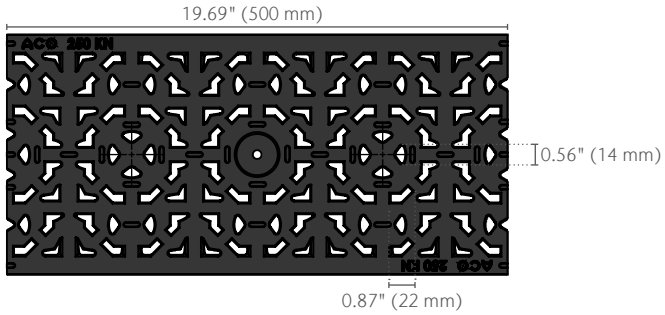



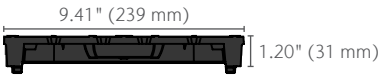

Product Name	Part No.	Length in (mm)	Width in (mm)	Weight lbs
Type 679Q Mosaic Ductile Iron Grate	**93957**	19.69 (500)	9.41 (239)	34.0
K2 QuickLok® Locking Bar	**10457**	-	-	0.5
QuickLok® grate removal hook	**01318**	-	-	0.3

Type 679Q Mosaic Ductile Iron Grate Spec Sheet

QuickLok® Locking Mechanism

ACO QuickLok is a patented boltless locking system. Grates are removed and replaced with the minimum time and effort for ease of maintenance.

The unique design of ACO QuickLok includes a locking stud fixed into the grate which clips into a locking bar.

The QuickLok locking stud is made from stainless steel and high density nylon. The locking bar and locking spring are stainless steel for use in both general purpose and corrosive environments.

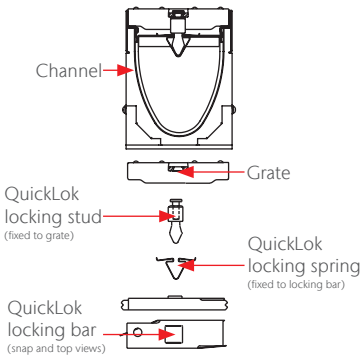

Specification Summary

General

The surface drainage system shall be ACO Drain K200, KS200, H200K-13, or H200KS-13, channels complete with ACO Type 679Q Mosaic Ductile Iron grate with QuickLok locking as manufactured by ACO, Inc. or similar approved.

Installation

The trench drain system and grates shall be installed in accordance with the manufacturer's installation instructions and recommendations.

Materials

The covers shall be manufactured from ductile iron and have minimum properties as follows:

- Ductile iron to ASTM A 536-84 - Grade 65-45-12
- Intake area of 38.3 in^2 (247.10 cm^2) per half meter of grate

The overall width of 9.41" (239 mm) and overall length of 19.69" (500 mm). Slots measure at a maximum of 0.98" (25 mm).

ADA-compliant per The Americans with Disabilities Act of 2010, Section 302.3

Australian Standard AS 3996 - 2006 Clause 3.3.6: max slot length dependent on slot width for grates that are deemed Bicycle Tire Penetration Resistant.

EN 1433 Load Class C
56,202 lbs — 1,160 psi

ACO, Inc.

© January 2026 ACO, Inc.
All reasonable care has been taken in compiling the information in this document. All recommendations and suggestions on the use of ACO products are made without guarantee since the conditions of use are beyond the control of the company. It is the customer's responsibility to ensure that each product is fit for its intended purpose and that the actual conditions of use are suitable. ACO, Inc. reserves the right to change products and specifications without notice.

info@acousa.com
www.acousa.com