KS200 Stainless Steel Edge Rail Channel System

One Meter Channel

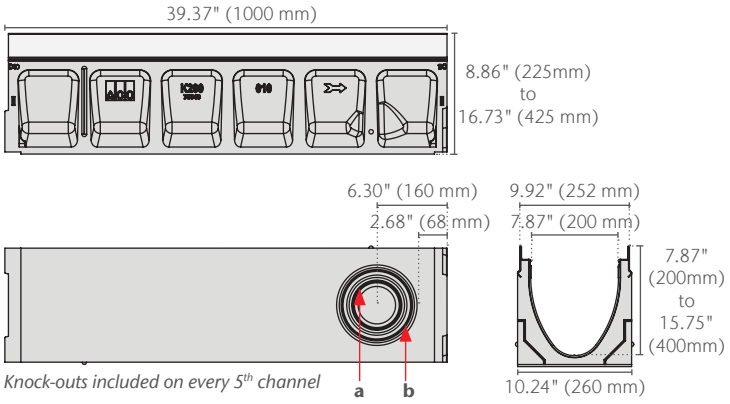

Knock-outs included on every 5th channel

Half Meter Channel

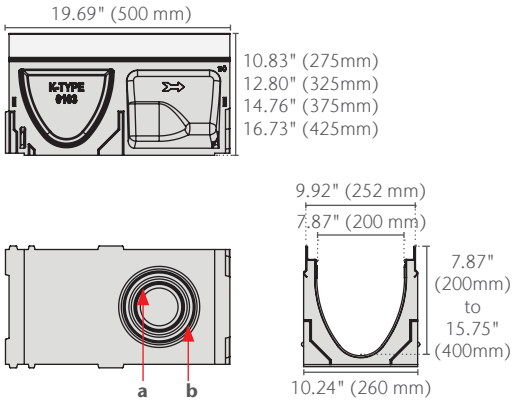

Type K902G In-line Catch Basin

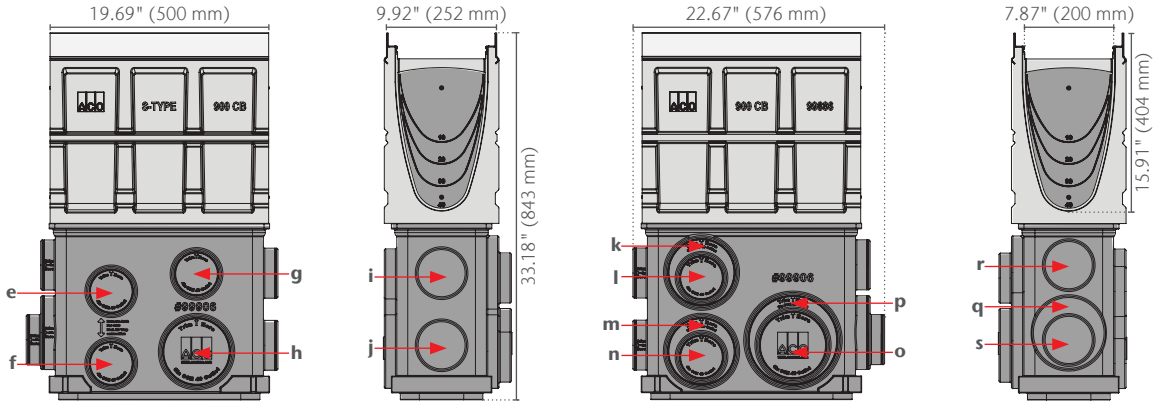

Total capacity = 19 gallons

End Cap

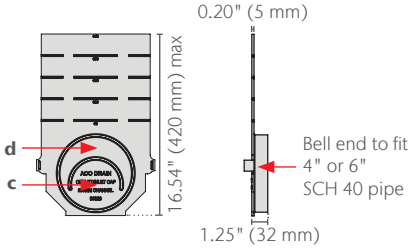

KS200 Stainless Steel Edge Rail Channel System

Description	Part No.	Invert[2] in (mm)	Weight lbs
K2-00 Neutral channel - 39.37" (1m)[1]	**75441**	7.87 (200)	83.6
K2-1 Sloped channel - 39.37" (1m)	**75401**	8.07 (205)	83.6
K2-2 Sloped channel - 39.37" (1m)	**75402**	8.27 (210)	84.7
K2-3 Sloped channel - 39.37" (1m)	**75403**	8.46 (215)	85.8
K2-4 Sloped channel - 39.37" (1m)	**75404**	8.66 (220)	86.9
K2-5 Sloped channel - 39.37" (1m)[1]	**75405**	8.86 (225)	88
K2-6 Sloped channel - 39.37" (1m)	**75406**	9.06 (230)	89.1
K2-7 Sloped channel - 39.37" (1m)	**75407**	9.25 (235)	90.2
K2-8 Sloped channel - 39.37" (1m)	**75408**	9.45 (240)	91.3
K2-9 Sloped channel - 39.37" (1m)	**75409**	9.65 (245)	92.4
K2-10 Sloped channel - 39.37" (1m)[1]	**75410**	9.84 (250)	93.5
K2-010 Neutral channel - 39.37" (1m)[1]	**75443**	9.84 (250)	93.5
K2-0103 Neutral channel - 19.69" (0.5m)[1]	**75444**	9.84 (250)	56
K2-11 Sloped channel - 39.37" (1m)	**75411**	10.04 (255)	94.6
K2-12 Sloped channel - 39.37" (1m)	**75412**	10.24 (260)	95.7
K2-13 Sloped channel - 39.37" (1m)	**75413**	10.43 (265)	96.8
K2-14 Sloped channel - 39.37" (1m)	**75414**	10.63 (270)	97.9
K2-15 Sloped channel - 39.37" (1m)[1]	**75415**	10.83 (275)	99
K2-16 Sloped channel - 39.37" (1m)	**75416**	11.02 (280)	100.1
K2-17 Sloped channel - 39.37" (1m)	**75417**	11.22 (285)	101.2
K2-18 Sloped channel - 39.37" (1m)	**75418**	11.41 (290)	102.3
K2-19 Sloped channel - 39.37" (1m)	**75419**	11.61 (295)	103.4
K2-20 Sloped channel - 39.37" (1m)[1]	**75420**	11.81 (300)	104.5
K2-020 Neutral channel - 39.37" (1m)[1]	**75445**	11.81 (300)	104.5
K2-0203 Neutral channel - 19.69" (0.5m)[1]	**75446**	11.81 (300)	64
K2-21 Sloped channel - 39.37" (1m)	**75421**	12.01 (305)	105.6
K2-22 Sloped channel - 39.37" (1m)	**75422**	12.2 (310)	106.7
K2-23 Sloped channel - 39.37" (1m)	**75423**	12.4 (315)	107.8
K2-24 Sloped channel - 39.37" (1m)	**75424**	12.6 (320)	108.9
K2-25 Sloped channel - 39.37" (1m)[1]	**75425**	12.8 (325)	110
K2-26 Sloped channel - 39.37" (1m)	**75426**	12.99 (330)	111.1
K2-27 Sloped channel - 39.37" (1m)	**75427**	13.19 (335)	112.2
K2-28 Sloped channel - 39.37" (1m)	**75428**	13.39 (340)	113.3
K2-29 Sloped channel - 39.37" (1m)	**75429**	13.58 (345)	114.4
K2-30 Sloped channel - 39.37" (1m)[1]	**75430**	13.78 (350)	115.5
K2-030 Neutral channel - 39.37" (1m)[1]	**75447**	13.78 (350)	115.5
K2-0303 Neutral channel - 19.69" (0.5m)[1]	**75448**	13.78 (350)	68
K2-31 Sloped channel - 39.37" (1m)	**75431**	13.98 (355)	116.6
K2-32 Sloped channel - 39.37" (1m)	**75432**	14.17 (360)	117.7
K2-33 Sloped channel - 39.37" (1m)	**75433**	14.37 (365)	118.8
K2-34 Sloped channel - 39.37" (1m)	**75434**	14.57 (370)	119.9
K2-35 Sloped channel - 39.37" (1m)[1]	**75435**	14.76 (375)	121
K2-36 Sloped channel - 39.37" (1m)	**75436**	14.96 (380)	122.1
K2-37 Sloped channel - 39.37" (1m)	**75437**	15.16 (385)	123.2
K2-38 Sloped channel - 39.37" (1m)	**75438**	15.35 (390)	124.3
K2-39 Sloped channel - 39.37" (1m)	**75439**	15.55 (395)	125.4
K2-40 Sloped channel - 39.37" (1m)[1]	**75440**	15.75 (400)	126.5
K2-040 Neutral channel - 39.37" (1m)[1]	**75449**	15.75 (400)	126.5
K2-0403 Neutral channel - 19.69" (0.5m)[1]	**75450**	15.75 (400)	77
K2-902S In-line catch basin - 19.69" (0.5m)[3]	**94612**	32.81 (833.3)	68
K2-621S catch basin - 19.69" (0.5m)[3]	**94621**	37.33 (948.1)	91
K2-631S catch basin - 19.69" (0.5m)[4]	**94634**	49.33 (1252.9)	101

Description	Part No.	Invert[2] in (mm)	Weight lbs
K2-Series 600 Optional plastic riser	**99902**	-	10
Foul air trap - fits both 900 & 600 series basins	**90854**	-	1.2
Universal end cap	**96821**	15.71(399)	1.4
Debris strainer for 4" bottom knockout	**93488**	-	0.2
K2-Installation device	**97478**	-	2.8
Grate removal tool	**01318**	-	0.3
K2-QuickLok® locking bar	**10457**	-	0.5

1. *This channel offers a bottom knockout feature; 4" & 6" round*
2. *Inverts shown are for the male end; for female invert depth subtract 5mm (≈0.2") from the male invert (except for neutral channels, where it will be same as male invert). To calculate the overall channel depth add 25mm (≈1.0") to invert depth.*
3. *This catch basin kit includes a polymer concrete top, removable QuickLok locking bar, trash bucket and plastic base. Select an appropriate grate.*
4. *This catch basin kit includes a polymer concrete top, removable QuickLok locking bar, deep trash bucket, plastic riser and plastic base. Select an appropriate grate.*

Outlet	Product	Outlet size (SCH 40)	Invert Depth	GPM	CFS
a	Bottom outlet - KS2-00	4" round	7.87"	153	0.34
a	Bottom outlet - KS2-040	4" round	15.75"	216	0.48
b	Bottom outlet -KS2-00	6" round	7.87"	344	0.77
b	Bottom outlet - KS2-040	6" round	15.75"	486	1.08
c	End outlet - KS2-00	4" round	7.87"	132	0.29
c	End outlet - KS2-40	4" round	15.75"	202	0.45
d	End outlet - KS2-10	6" round	9.84"	320	0.71
d	End outlet - KS2-40	6" round	15.75"	437	0.97
e	Type KS2-902S	4" round	25.33"	263	0.59
f	Type KS2-902S	4" round	31.83"	297	0.66
g	Type KS2-902S	4" round	23.76"	254	0.57
h	Type KS2-902S	6" round	31.83"	658	1.47
i	Type KS2-902S	4" round	23.91"	255	0.57
j	Type KS2-902S	4" round	30.40"	290	0.65
k	Type KS2-902S	6" round	24.68"	570	1.27
l	Type KS2-902S	4" round	24.13"	256	0.57
m	Type KS2-902S	6" round	31.82"	658	1.47
n	Type KS2-902S	4" round	31.26"	294	0.66
o	Type KS2-902S	6" round	31.26"	651	1.45
p	Type KS2-902S	8" round	31.82"	1149	2.56
q	Type KS2-902S	6" round	30.32"	640	1.43
r	Type KS2-902S	4" round	23.19"	251	0.56
s	Type KS2-902S	4" round	29.90"	288	0.64

Note:
These are the pipe flow rates at the specified outlet, NOT channel flow rates.
Catch basin flow rates are without trash bucket - using trash bucket reduces flow.

ACO Drain | KlassikDrain

KS200 Stainless Steel Edge Rail Channel System

Specification Summary

General

The surface drainage system shall be ACO Drain KS200 complete with gratings secured with QuickLok locking as manufactured by ACO, Inc. or approved equal.

Grates

Grates shall be specified. See separate ACO Spec Info grate sheets for details. After removal of grates and QuickLok bar there shall be uninterrupted access to the trench to aid maintenance.

Installation

The trench drain system shall be installed in accordance with the manufacturer's installation instructions and recommendations.

Materials

The trench system bodies shall be manufactured from polyester polymer concrete with the minimum properties as follows:

- Compressive strength: 14,000 psi
- Flexural strength: 4,000 psi
- Water absorption 0.07%
- Frost-proof
- Salt-proof
- Dilute acid and alkali-resistant

The nominal clear opening shall be 8" (200 mm) with overall width of 10.24" (260 mm). Pre-cast units shall be manufactured with either an invert slope of 0.5% or with neutral invert and have a wall thickness of at least 0.50" (13 mm). Each unit will feature a partial radius in the trench bottom and a male to female interconnecting end profile. Units shall have horizontal cast in anchoring keys on the outside wall to ensure maximum mechanical bond to the surrounding bedding material and pavement surface. The stainless steel edge rail will be integrally cast in by the manufacturer to ensure maximum homogeneity between polymer concrete body and edge rail. Each edge rail shall be at least 3/32" (2.5 mm) thick.

EN1433 Load Class E
134,885 lbs – 2,785 psi

ACO, Inc.

© September 2026 ACO, Inc.
All reasonable care has been taken in compiling the information in this document. All recommendations and suggestions on the use of ACO products are made without guarantee since the conditions of use are beyond the control of the company. It is the customer's responsibility to ensure that each product is fit for its intended purpose and that the actual conditions of use are suitable. ACO, Inc. reserves the right to change products and specifications without notice.

info@acousa.com
www.acousa.com