# Type 661Q Ductile Iron Slotted Grate Spec Sheet

## Type 661Q Ductile Iron Slotted Grate

*part no. 10351*

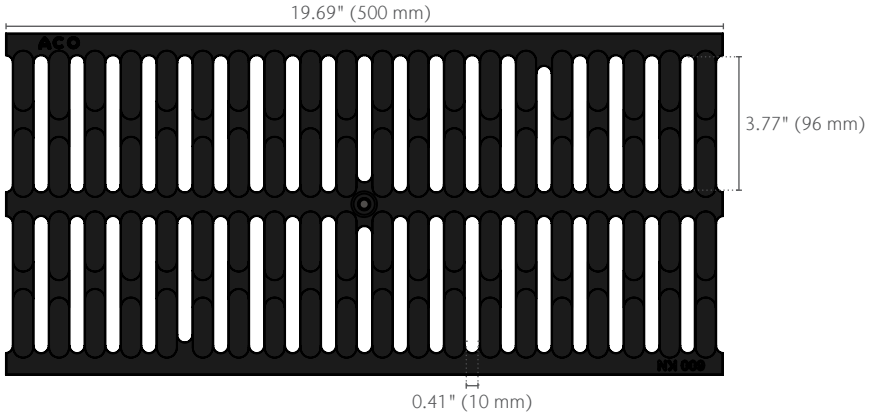


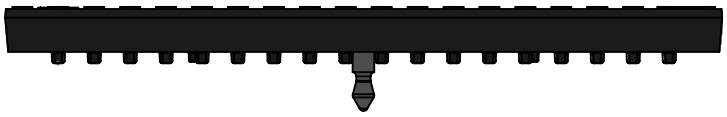

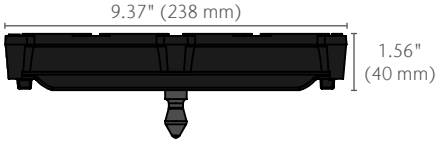


| Product Name | Part No. | Length in (mm) | Width in (mm) | Weight lbs |
|---|---|---|---|---|
| Type 661Q Ductile Iron Slotted Grate | **10351** | 19.69 (500) | 9.37 (238) | 35.9 |
| K2 QuickLok® Locking Bar | **10457** | - | - | 0.5 |
| QuickLok® grate removal hook | **01318** | - | - | 0.3 |

# Type 661Q Ductile Iron Slotted Grate Spec Sheet

## QuickLok® Locking Mechanism

ACO QuickLok is a patented boltless locking system. Grates are removed and replaced with the minimum time and effort for ease of maintenance.

The unique design of ACO QuickLok includes a locking stud fixed into the grate which clips into a locking bar.

The QuickLok locking stud is made from stainless steel and high density nylon. The locking bar and locking spring are stainless steel for use in both general purpose and corrosive environments.

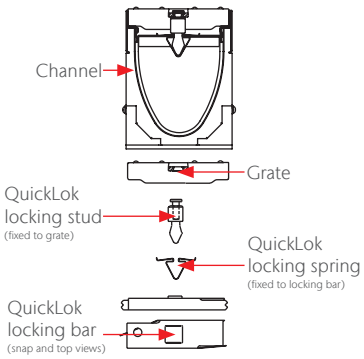


## Specification Summary

### General

The surface drainage system shall be ACO Drain K200, KS200, H200K-13, or H200KS-13 channels complete with ACO Type 661Q Ductile Iron Slotted grate with QuickLok locking as manufactured by ACO, Inc. or similar approved.

### Installation

The trench drain system and grates shall be installed in accordance with the manufacturer's installation instructions and recommendations.

### Materials

The covers shall be manufactured from ductile iron and have minimum properties as follows:

- Ductile iron to ASTM A 536-84 - Grade 80-55-06
- Intake area of 63.55 in² (410 cm²) per half meter of grate

The overall width of 9.37" (238 mm) and overall length of 19.69" (500 mm). Slots measure at a maximum of 3.77" (96 mm) x 0.41" (10 mm)

Slip-resistant:
BPN > 24 based on Pendulum Test

EN1433 Load Class E
134,885 lbs – 2,785 psi

**ACO, Inc.**

© September 2026 ACO, Inc.
All reasonable care has been taken in compiling the information in this document. All recommendations and suggestions on the use of ACO products are made without guarantee since the conditions of use are beyond the control of the company. It is the customer's responsibility to ensure that each product is fit for its intended purpose and that the actual conditions of use are suitable. ACO, Inc. reserves the right to change products and specifications without notice.

info@acousa.com
www.acousa.com