MonoBloc HD 100 Spec Sheet

Channel

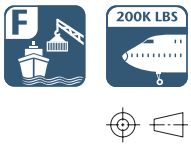

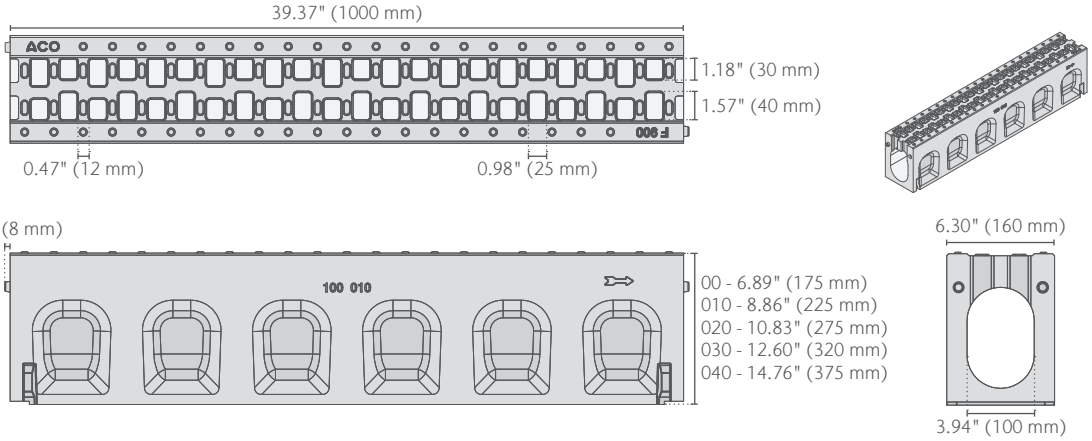

Access Channel

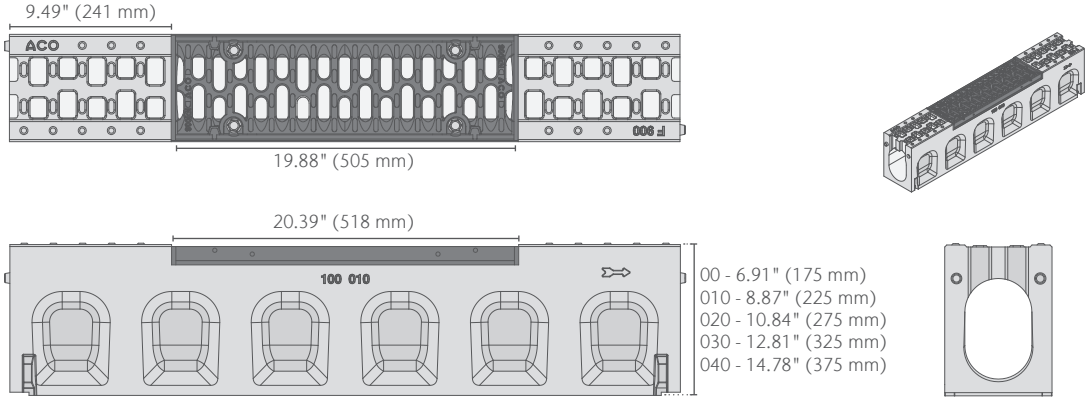

Note: Includes 4-Bolt (M10 x 30) Removeable Ductile Iron Grate, part no. 99590.

Catch Basin Access Channel

Grate removed for visual of bottom hole.

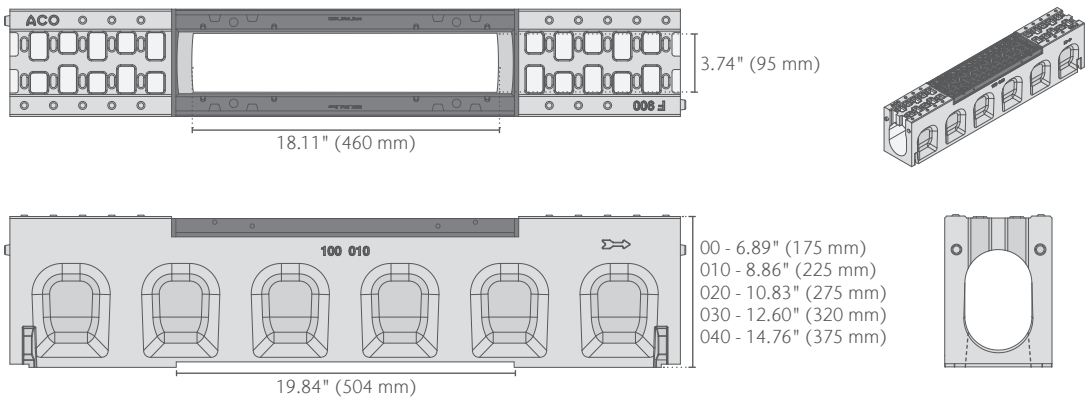

Note: Includes 4-Bolt (M10 x 30) Removeable Ductile Iron Grate, part no. 99590.

MonoBloc HD 100 Spec Sheet

In-line Catch Basin

part no. 954319

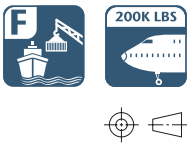

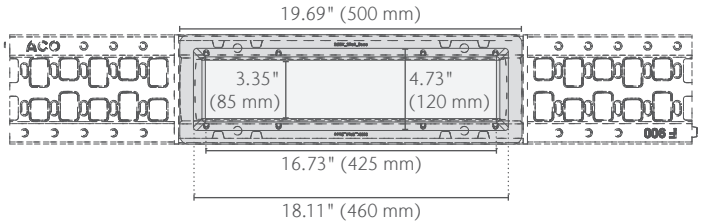

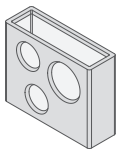

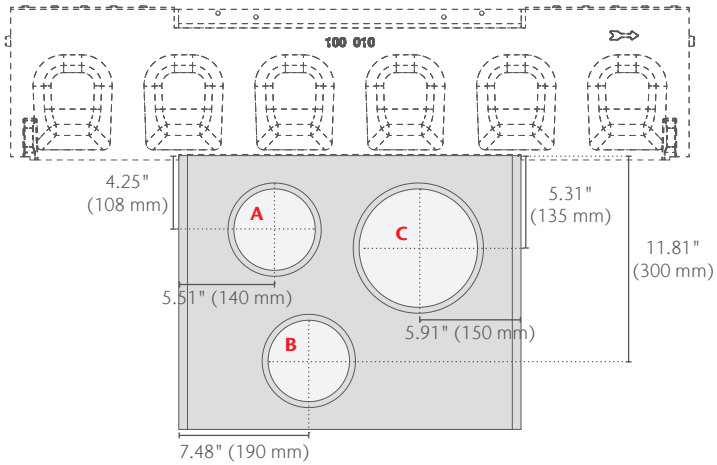

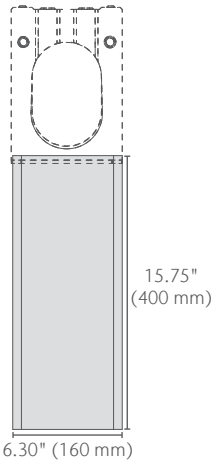

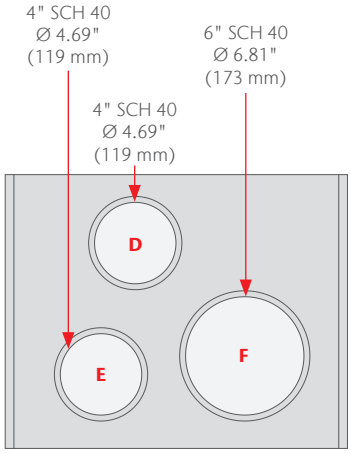

Outlet	Outlet Type	Outlet Size SCH 40	Outlet Form	Invert Depth in (mm)	Flow Rate GPM	Flow Rate CFS
A	In-line Catch Basin	4"	00	12.72 (323)	157	0.35
			010	14.69 (373)	174	0.39
			020	16.65 (423)	190	0.42
			030	18.62 (473)	205	0.46
			040	20.59 (523)	218	0.49
B	In-line Catch Basin	4"	00	20.28 (515)	216	0.48
			010	22.24 (565)	229	0.51
			020	24.21 (615)	242	0.54
			030	26.18 (665)	253	0.56
			040	28.15 (715)	264	0.59
C	In-line Catch Basin	6"	00	14.80 (376)	374	0.83
			010	16.77 (426)	412	0.92
			020	18.74 (476)	446	0.99
			030	20.71 (526)	478	1.06
			040	22.68 (576)	508	1.13
D	In-line Catch Basin	4"	00	12.40 (315)	153	0.34
			010	14.37 (365)	171	0.38
			020	16.34 (415)	187	0.42
			030	18.31 (465)	202	0.45
			040	20.28 (515)	216	0.48
E	In-line Catch Basin	4"	00	19.96 (507)	214	0.48
			010	21.93 (557)	227	0.51
			020	23.90 (607)	240	0.53
			030	25.87 (657)	251	0.56
			040	27.83 (707)	263	0.59
F	In-line Catch Basin	6"	00	19.92 (506)	465	1.04
			010	21.89 (556)	496	1.10
			020	23.86 (606)	525	1.17
			030	25.83 (656)	552	1.23
			040	27.80 (706)	578	1.29
G	Outlet End Cap	4"	010	8.03 (204)	103	0.23
			020	10.00 (254)	128	0.29
			030	11.97 (304)	149	0.33
			040	13.94 (354)	168	0.37

Note: These are the pipe flow rates at the specified outlet, NOT channel flow rates. Catch basin flow rates are without trash bucket (trash bucket reduces flow).

Outlet End Cap

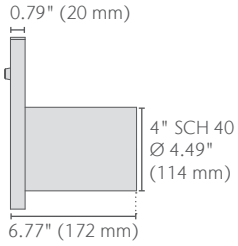

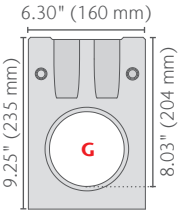

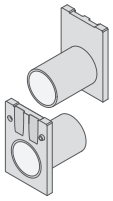

End Cap

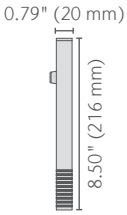

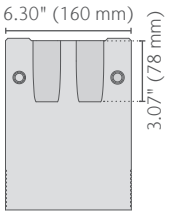

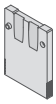

MonoBloc HD 100 Spec Sheet







MonoBloc HD 100 Channels	Part No.	Length in (mm)	Invert Depth* in (mm)	Weight lbs
MonoBloc HD 100 - 00 Neutral Channel	**954304**	39.37 (1,000)	5.91 (150)	77.4
MonoBloc HD 100 - 00 Access Channel	**954309**	39.37 (1,000)	5.91 (150)	85.2
MonoBloc HD 100 - 00 Catch Basin Access Channel	**954314**	39.37 (1,000)	5.91 (150)	76.2
MonoBloc HD 100 - 01 Sloping Channel	**954220**	39.37 (1,000)	6.10 (155)	77.7
MonoBloc HD 100 - 02 Sloping Channel	**954221**	39.37 (1,000)	6.30 (160)	78.7
MonoBloc HD 100 - 03 Sloping Channel	**954222**	39.37 (1,000)	6.50 (165)	79.6
MonoBloc HD 100 - 04 Sloping Channel	**954223**	39.37 (1,000)	6.69 (170)	80.5
MonoBloc HD 100 - 05 Sloping Channel	**954224**	39.37 (1,000)	6.89 (175)	81.5
MonoBloc HD 100 - 06 Sloping Channel	**954225**	39.37 (1,000)	7.09 (180)	82.4
MonoBloc HD 100 - 07 Sloping Channel	**954226**	39.37 (1,000)	7.28 (185)	83.3
MonoBloc HD 100 - 08 Sloping Channel	**954227**	39.37 (1,000)	7.48 (190)	84.2
MonoBloc HD 100 - 09 Sloping Channel	**954228**	39.37 (1,000)	7.68 (195)	85.3
MonoBloc HD 100 - 10 Sloping Channel	**954229**	39.37 (1,000)	7.87 (200)	86.0
MonoBloc HD 100 - 010 Neutral Channel	**954305**	39.37 (1,000)	7.87 (200)	86.1
MonoBloc HD 100 - 010 Access Channel	**954310**	39.37 (1,000)	7.87 (200)	93.9
MonoBloc HD 100 - 010 Catch Basin Access Channel	**954315**	39.37 (1,000)	7.87 (200)	85.9
MonoBloc HD 100 - 11 Sloping Channel	**954230**	39.37 (1,000)	8.07 (205)	86.9
MonoBloc HD 100 - 12 Sloping Channel	**954231**	39.37 (1,000)	8.27 (210)	87.8
MonoBloc HD 100 - 13 Sloping Channel	**954232**	39.37 (1,000)	8.46 (215)	88.8
MonoBloc HD 100 - 14 Sloping Channel	**954233**	39.37 (1,000)	8.66 (220)	89.7
MonoBloc HD 100 - 15 Sloping Channel	**954234**	39.37 (1,000)	8.86 (225)	90.6
MonoBloc HD 100 - 16 Sloping Channel	**954235**	39.37 (1,000)	9.06 (230)	91.5
MonoBloc HD 100 - 17 Sloping Channel	**954236**	39.37 (1,000)	9.25 (235)	92.4
MonoBloc HD 100 - 18 Sloping Channel	**954237**	39.37 (1,000)	9.45 (240)	93.3
MonoBloc HD 100 - 19 Sloping Channel	**954238**	39.37 (1,000)	9.65 (245)	94.2
MonoBloc HD 100 - 20 Sloping Channel	**954239**	39.37 (1,000)	9.84 (250)	95.0
MonoBloc HD 100 - 020 Neutral Channel	**954306**	39.37 (1,000)	9.84 (250)	94.8
MonoBloc HD 100 - 020 Access Channel	**954311**	39.37 (1,000)	9.84 (250)	102.7
MonoBloc HD 100 - 020 Catch Basin Access Channel	**954316**	39.37 (1,000)	9.84 (250)	94.6
MonoBloc HD 100 - 21 Sloping Channel	**954240**	39.37 (1,000)	10.04 (255)	95.9
MonoBloc HD 100 - 22 Sloping Channel	**954241**	39.37 (1,000)	10.24 (260)	96.8
MonoBloc HD 100 - 23 Sloping Channel	**954242**	39.37 (1,000)	10.43 (265)	97.7
MonoBloc HD 100 - 24 Sloping Channel	**954243**	39.37 (1,000)	10.63 (270)	98.7
MonoBloc HD 100 - 25 Sloping Channel	**954244**	39.37 (1,000)	10.83 (275)	99.6
MonoBloc HD 100 - 26 Sloping Channel	**954245**	39.37 (1,000)	11.02 (280)	100.4
MonoBloc HD 100 - 27 Sloping Channel	**954246**	39.37 (1,000)	11.22 (285)	101.3
MonoBloc HD 100 - 28 Sloping Channel	**954247**	39.37 (1,000)	11.42 (290)	102.2
MonoBloc HD 100 - 29 Sloping Channel	**954248**	39.37 (1,000)	11.61 (295)	103.1
MonoBloc HD 100 - 30 Sloping Channel	**954249**	39.37 (1,000)	11.81 (300)	103.9
MonoBloc HD 100 - 030 Neutral Channel	**954307**	39.37 (1,000)	11.81 (300)	103.4
MonoBloc HD 100 - 030 Access Channel	**954312**	39.37 (1,000)	11.81 (300)	111.2
MonoBloc HD 100 - 030 Catch Basin Access Channel	**954317**	39.37 (1,000)	11.81 (300)	103.2
MonoBloc HD 100 - 31 Sloping Channel	**954250**	39.37 (1,000)	12.01 (305)	104.8
MonoBloc HD 100 - 32 Sloping Channel	**954251**	39.37 (1,000)	12.20 (310)	105.7
MonoBloc HD 100 - 33 Sloping Channel	**954252**	39.37 (1,000)	12.40 (315)	106.5
MonoBloc HD 100 - 34 Sloping Channel	**954253**	39.37 (1,000)	12.60 (320)	107.4
MonoBloc HD 100 - 35 Sloping Channel	**954254**	39.37 (1,000)	12.80 (325)	108.3
MonoBloc HD 100 - 36 Sloping Channel	**954255**	39.37 (1,000)	12.99 (330)	109.1
MonoBloc HD 100 - 37 Sloping Channel	**954256**	39.37 (1,000)	13.19 (335)	110.0
MonoBloc HD 100 - 38 Sloping Channel	**954257**	39.37 (1,000)	13.39 (340)	110.9
MonoBloc HD 100 - 39 Sloping Channel	**954258**	39.37 (1,000)	13.58 (345)	111.7
MonoBloc HD 100 - 40 Sloping Channel	**954259**	39.37 (1,000)	13.78 (350)	112.6
MonoBloc HD 100 - 040 Neutral Channel	**954308**	39.37 (1,000)	13.78 (350)	109.4
MonoBloc HD 100 - 040 Access Channel	**954313**	39.37 (1,000)	13.78 (350)	113.6
MonoBloc HD 100 - 040 Catch Basin Access Channel	**954318**	39.37 (1,000)	13.78 (350)	111.5

** Inverts shown are for the male end; for female invert depth subtract 5 mm (≈0.2") from the male invert (only applies to Sloping Channels). To calculate the overall channel depth add 25 mm (≈1") to invert depth.*

MonoBloc HD 100 Spec Sheet

MonoBloc HD 100 Accessories	Part No.	Length in (mm)	Invert Depth in (mm)	Weight lbs
In-line Catch Basin	**954319**	19.69 (500)	18.90 (480)	59.7
00 End Cap	**954302**	-	-	3.7
010 End Cap	**954339**	-	-	3.4
020 End Cap	**954340**	-	-	4.2
030 End Cap	**954341**	-	-	5.0
040 End Cap	**954342**	-	-	5.8
010 Outlet End Cap	**954343**	-	-	3.6
020 Outlet End Cap	**954344**	-	-	4.4
030 Outlet End Cap	**954345**	-	-	5.2
040 Outlet End Cap	**954346**	-	-	6.0

Specification Summary

General
The surface drainage system shall be ACO Infrastructure MonoBloc HD 100 as manufactured by ACO, Inc. or approved equal.

Grates
Grate openings shall be monolithically cast as part of the trench drain body as a single piece. Grate openings provide 40% (19.0 in^2 per linear ft.) open area for maximum hydraulic efficiency. Access shall be via ductile iron 4-bolt access covers with stainless steel M10 x 30 bolts on all access and outlet channels.

Installation
The trench drain system shall be installed in accordance with the manufacturer's installation instructions and drawings.

Materials
The trench system and catch basin bodies bodies shall be manufactured from polyester polymer concrete with minimum properties as follows:

- Compressive strength: 14,000 psi
- Flexural strength: 4,000 psi
- Water absorption: 0.07%
- Frost-proof
- Salt-proof - Compliant with B117 Salt Spray Test
- Dilute acid and alkali-resistant

The nominal clear opening shall be 3.94" (100 mm) with overall width of 6.30" (160 mm). Modular units shall be manufactured with neutral invert and have a wall thickness of at least 0.39" (10 mm).

Each unit will feature a full radius in the trench bottom and a male to female interconnecting end profile. Units shall have cast in anchoring features on the outside wall to ensure maximum mechanical bond to the surrounding bedding material and pavement surface. Trench system shall shall be certified to load class F 900 as defined by EN 1433 or able to withstand loadings up to 4,177 psi.

EN1433 Load Class F
202,328 lbs – 4,177 psi

FAA Airside
200K lb Proof Load

ACO, Inc.

© November 2026 ACO, Inc.
All reasonable care has been taken in compiling the information in this document. All recommendations and suggestions on the use of ACO products are made without guarantee since the conditions of use are beyond the control of the company. It is the customer's responsibility to ensure that each product is fit for its intended purpose and that the actual conditions of use are suitable. ACO, Inc. reserves the right to change products and specifications without notice.

info@acousa.com
www.acousa.com