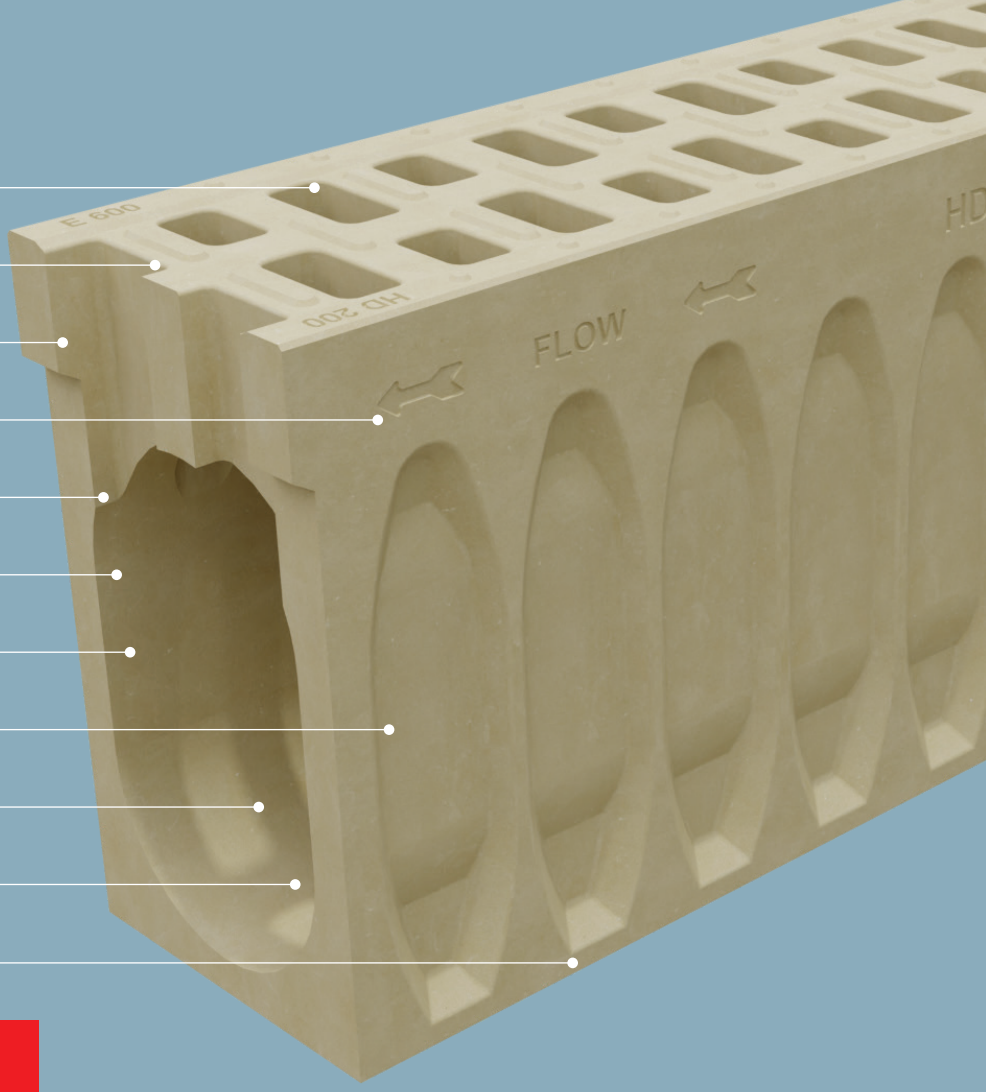

- High-intake Slots (30% Open Area)
- Abrasion-resistant Surface
- Interconnecting End Profiles
- Directional Arrows for Install
- High Strength Polymer Concrete
- Monolithic Build
- Exceeds AASHTO HS-25 Requirements
- Profiled Side Walls
- 8"Internal Width Trench
- Flume Outlet Connections
- Sloped (0.6%) Channel Units

MonoBloc HD 200

Sloped Monolithic Trench Drain
4" Internal Width

Heavy-Duty Durable Drainage

MonoBloc is designed to address the drainage demands of areas with fast, heavy traffic in urban and rural applications, including highways and interstates (DOT approved in most US states).

The monolithic construction provides many benefits over fully grated systems, especially in applications where the drainage cannot be positioned outside the flow of traffic.

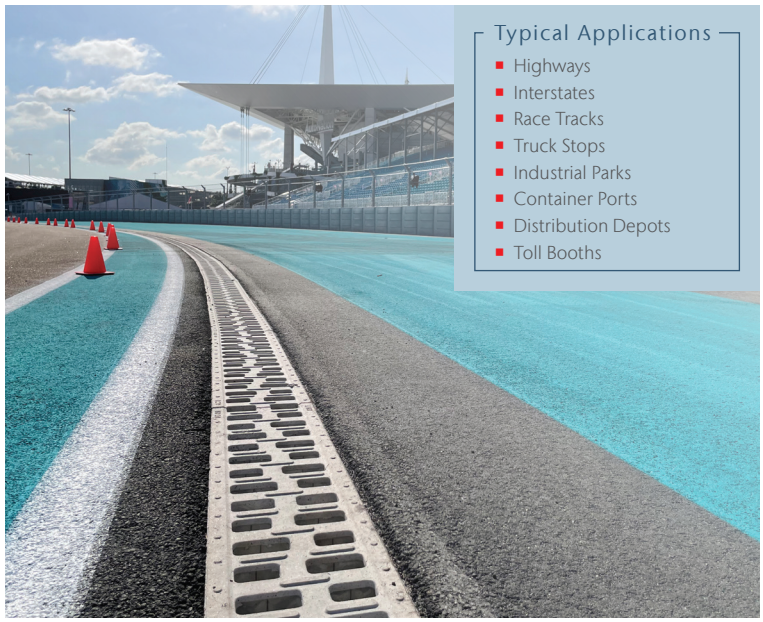

Typical Applications

- Highways
- Interstates
- Race Tracks
- Truck Stops
- Industrial Parks
- Container Ports
- Distribution Depots
- Toll Booths

E

EN 1433 Load Class E
134,885 lbs – 2,785 psi

200K LBS

FAA Airside
200K lb Proof Load

Monolithic Ingenuity

HD 200's single-piece construction provides unique benefits over removable-grate systems, especially in applications where the drainage cannot be positioned outside the flow of traffic:

- Solid build
- High structural strength
- Excellent load and hydraulic capacities
- No loosening from vibrations
- No grates outside of access channels
- Bolted grate for access channel
- Quick installation reduces road closures
- More economical than grated systems

Channel Options

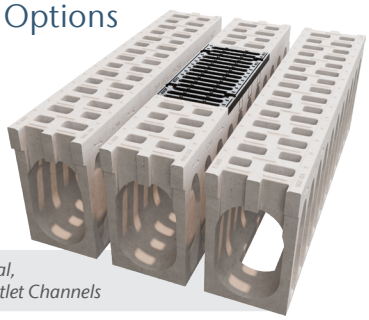

Sloping/Neutral, Access and Outlet Channels

SLOPING CHANNEL

- 4' length
- 0.6% slope
- 25 depths
- 100' continuous run

NEUTRAL CHANNEL

- 4' length
- 3 depths
- create neutral depth run or use to extend sloped run

ACCESS CHANNEL

- provides access for maintenance via grated opening
- 4' length
- 3 depths
- 19.69" (0.5 m) ductile iron, 4-bolt lockable grate

OUTLET CHANNEL

- high-capacity evacuation via flume outlet connection
- 4' length
- 3 depths
- 928–2,867 GPM

25 Channel System Layout

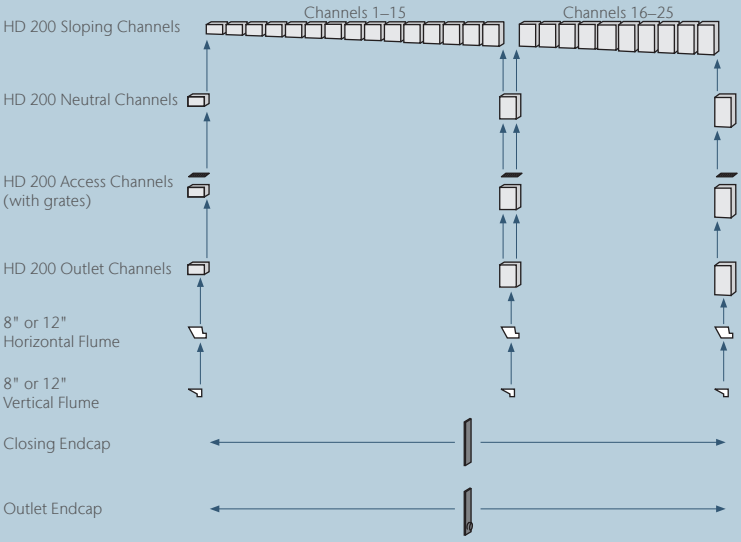

HD 200 Channel

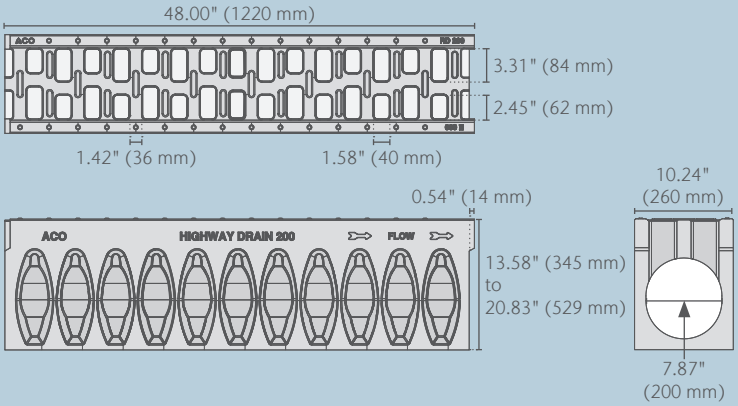

HD 200 Channels	Invert Depth, in (mm)	Weight, lbs
Sloping (1–25)	12.83 (326)–19.88 (505)	241.0–280.6
Neutral (1, 15, 25)	12.52 (318), 16.93 (430), 19.88 (505)	241.0, 264.1, 280.6
Access (1, 15, 25)	12.52 (318), 16.93 (430), 19.88 (505)	243.0, 266.1, 282.6
Outlet (1, 15, 25)	12.52 (318), 16.93 (430), 19.88 (505)	233.0, 256.1, 272.6

ACO, Inc.

West Sales Office
825 W. Beechcraft St.
Casa Grande, AZ 85122
Tel: (520) 421-9988
info@acousa.com
www.acousa.com

Northeast Sales Office
9470 Pinecone Drive
Mentor, OH 44060
Tel: (440) 639-7230

Southeast Sales Office
481 Munn Rd. Ste 225
Fort Mill, SC 29715
Tel: (440) 639-7230

© November 2026 ACO, Inc.
All reasonable care has been taken in compiling the information in this document. All recommendations and suggestions on the use of ACO products are made without guarantee since the conditions of use are beyond the control of the company. It is the customer's responsibility to ensure that each product is fit for its intended purpose and that the actual conditions of use are suitable. ACO, Inc. reserves the right to the change products and specifications without notice.

ACO. we care for water