TD100 Grate

One Meter Channel

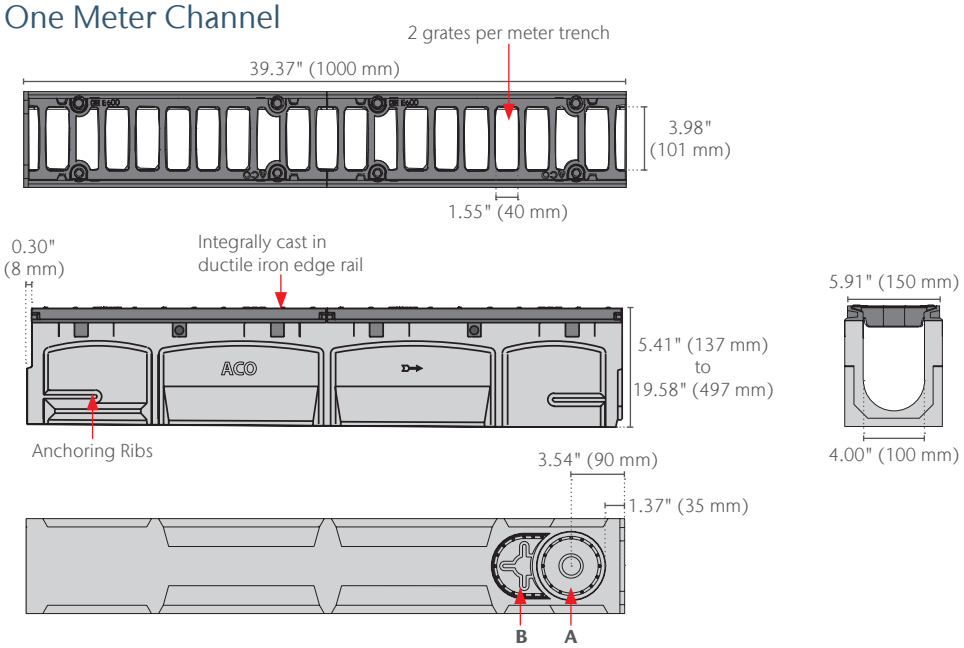

Half Meter Channel

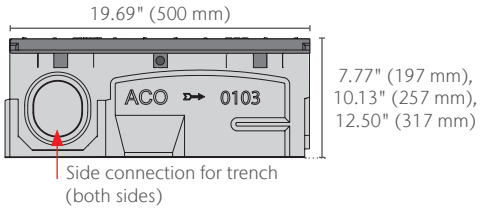

In-Line Catch Basin

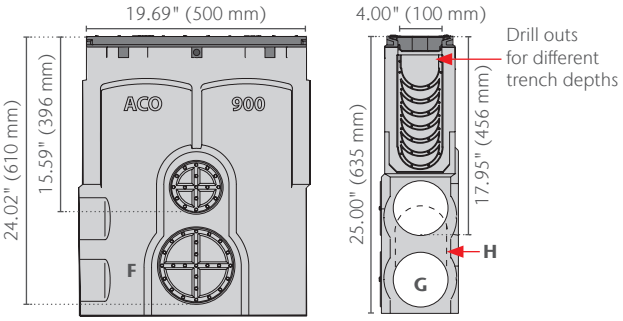

End Caps

Oval Inlet Cap

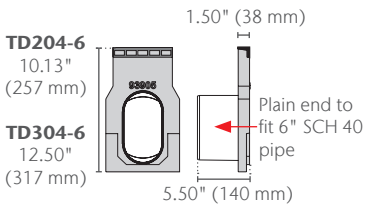

Closing/Inlet/Outlet Cap

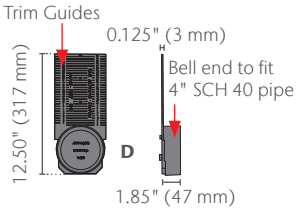

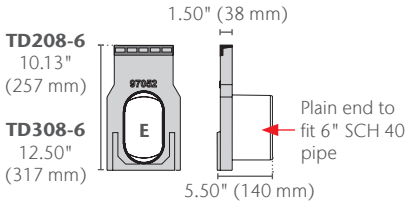

Product	Invert Depth	A-4" Dia GPM	A-4" Dia CFS	B-6" Dia GPM	B-6" Dia CFS	D-4" Dia GPM	D-4" Dia CFS	E-6" Dia GPM	E-6" Dia CFS	F-6" Dia GPM	F-6" Dia CFS	G-6" Dia GPM	G-6" Dia CFS	H GPM	H CFS
TD01	4.41	95	0.21	155	0.35	-	-	-	-	-	-	-	-	-	-
TD10	6.77	126	0.28	207	0.46	100	0.22	-	-	-	-	-	-	-	-
TD20	9.13	152	0.34	248	0.55	131	0.29	194	0.43	-	-	-	-	-	-
TD30	11.50	173	0.39	283	0.63	155	0.35	238	0.53	-	-	-	-	-	-
TD40	13.86	192	0.43	315	0.70	-	-	-	-	-	-	-	-	-	-
TD50	16.22	210	0.47	343	0.76	-	-	-	-	-	-	-	-	-	-
TD60	18.58	226	0.50	370	0.82	-	-	-	-	-	-	-	-	-	-
TD900	24.00	-	-	-	-	-	-	-	-	561	1.25	225	0.59	399	0.91

Note: *These are the pipe flow rates at the specified outlet,* **NOT** *channel flow rates.*

www.acousa.com

TD100 Grate

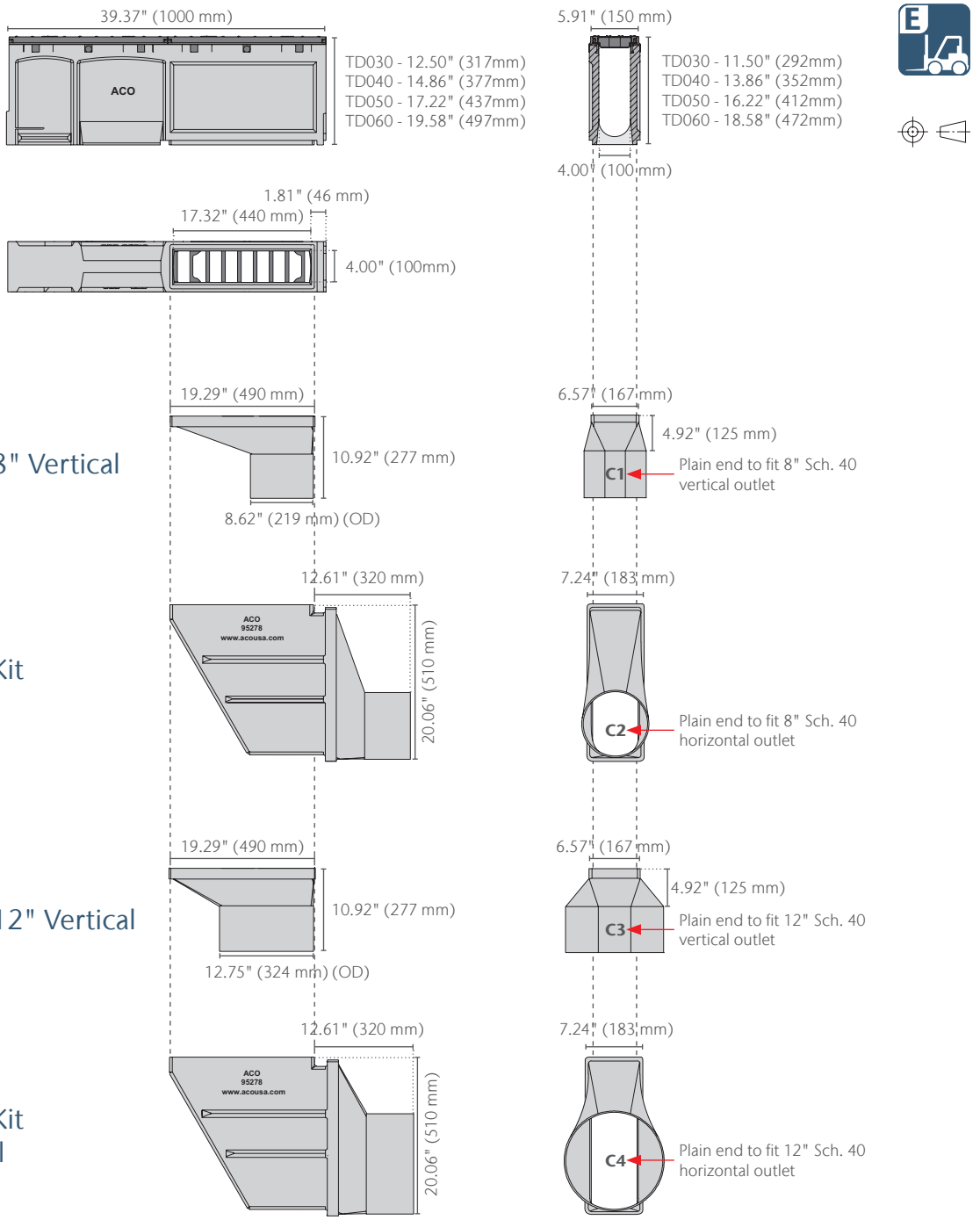

Product	Invert Depth	C1 - 8" V GPM	C1 - 8" V CFS	C2 - 8" H GPM	C2 - 8" H CFS
TD030	17.12	872	1.94	1135	2.53
TD040	19.48	934	2.08	1184	2.64
TD050	21.84	992	2.21	1230	2.74
TD060	24.20	1047	2.33	1275	2.84

Invert Depth	C3 - 12" V GPM	C3 - 12" V CFS	C4 - 12" H GPM	C4 - 12" H CFS
30.96	1962	4.37	2459	5.48
33.32	2102	4.68	2571	5.73
35.68	2232	4.97	2679	5.97
38.04	2356	5.25	2783	6.20

Note: *These are the pipe flow rates at the specified outlet,* **NOT** *channel flow rates.*

ACO Infrastructure | TraffikDrain

TD100 Grate

TD100 Channels	Part No. Grated	Length in (mm)	Invert Depth female in (mm)	Invert Depth male in (mm)	Weight lbs
TD01 Neutral Channel	**96105**	**39.37 (1000)**	**4.41 (112)**	**4.41 (112)**	**62.7**
TD1 Sloping Channel	96111	39.37 (1000)	4.41 (112)	4.65 (118)	63.8
TD2 Sloping Channel	96128	39.37 (1000)	4.65 (118)	4.88 (124)	64.8
TD3 Sloping Channel	96134	39.37 (1000)	4.88 (124)	5.12 (130)	65.8
TD4 Sloping Channel	96140	39.37 (1000)	5.12 (130)	5.35 (136)	66.8
TD5 Sloping Channel	96153	39.37 (1000)	5.35 (136)	5.59 (142)	67.8
TD6 Sloping Channel	96162	39.37 (1000)	5.59 (142)	5.83 (148)	68.9
TD7 Sloping Channel	96176	39.37 (1000)	5.83 (148)	6.06 (154)	69.9
TD8 Sloping Channel	96189	39.37 (1000)	6.06 (154)	6.30 (160)	70.9
TD9 Sloping Channel	96191	39.37 (1000)	6.30 (160)	6.54 (166)	71.9
TD10 Sloping Channel	96206	39.37 (1000)	6.54 (166)	6.77 (172)	72.9
TD010 Neutral Channel	**96218**	**39.37 (1000)**	**6.77 (172)**	**6.77 (172)**	**73.4**
TD0103 Neutral Channel	**96221**	**19.69 (500)**	**6.77 (172)**	**6.77 (172)**	**38.4**
TD11 Sloping Channel	96234	39.37 (1000)	6.77 (172)	7.01 (178)	73.9
TD12 Sloping Channel	96245	39.37 (1000)	7.01 (178)	7.24 (184)	74.9
TD13 Sloping Channel	96252	39.37 (1000)	7.24 (184)	7.48 (190)	75.9
TD14 Sloping Channel	96269	39.37 (1000)	7.48 (190)	7.72 (196)	76.9
TD15 Sloping Channel	96277	39.37 (1000)	7.72 (196)	7.95 (202)	77.9
TD16 Sloping Channel	96283	39.37 (1000)	7.95 (202)	8.19 (208)	79.0
TD17 Sloping Channel	96295	39.37 (1000)	8.19 (208)	8.43 (214)	80.0
TD18 Sloping Channel	96301	39.37 (1000)	8.43 (214)	8.66 (220)	81.0
TD19 Sloping Channel	96316	39.37 (1000)	8.66 (220)	8.90 (226)	82.0
TD20 Sloping Channel	96329	39.37 (1000)	8.90 (226)	9.13 (232)	83.0
TD020 Neutral Channel	**96337**	**39.37 (1000)**	**9.13 (232)**	**9.13 (232)**	**83.6**
TD0203 Neutral Channel	**96342**	**19.69 (500)**	**9.13 (232)**	**9.13 (232)**	**42.2**
TD21 Sloping Channel	96351	39.37 (1000)	9.13 (232)	9.37 (238)	84.0
TD22 Sloping Channel	96364	39.37 (1000)	9.37 (238)	9.61 (244)	85.0
TD23 Sloping Channel	96376	39.37 (1000)	9.61 (244)	9.84 (250)	86.0
TD24 Sloping Channel	96385	39.37 (1000)	9.84 (250)	10.08 (256)	87.0
TD25 Sloping Channel	96398	39.37 (1000)	10.08 (256)	10.31 (262)	88.0
TD26 Sloping Channel	96403	39.37 (1000)	10.31 (262)	10.55 (268)	89.1
TD27 Sloping Channel	96411	39.37 (1000)	10.55 (268)	10.79 (274)	90.1
TD28 Sloping Channel	96429	39.37 (1000)	10.79 (274)	11.02 (280)	91.1
TD29 Sloping Channel	96434	39.37 (1000)	11.02 (280)	11.26 (286)	92.1
TD30 Sloping Channel	96447	39.37 (1000)	11.26 (286)	11.50 (292)	93.1
TD030 Neutral Channel	**96456**	**39.37 (1000)**	**11.50 (292)**	**11.50 (292)**	**95.4**
TD0303 Neutral Channel	**96462**	**19.69 (500)**	**11.50 (292)**	**11.50 (292)**	**46.4**
TD030 Outlet Channel	**96448**	**39.37 (1000)**	**11.50 (292)**	**11.50 (292)**	**90.0**
TD31 Sloping Channel	96253	39.37 (1000)	11.50 (292)	11.73 (298)	98.4
TD32 Sloping Channel	96257	39.37 (1000)	11.73 (298)	11.97 (304)	101.0
TD33 Sloping Channel	96259	39.37 (1000)	11.97 (304)	12.20 (310)	103.6
TD34 Sloping Channel	96262	39.37 (1000)	12.20 (310)	12.44 (316)	106.2
TD35 Sloping Channel	96265	39.37 (1000)	12.44 (316)	12.68 (322)	106.4
TD36 Sloping Channel	96268	39.37 (1000)	12.68 (322)	12.91 (328)	107.5
TD37 Sloping Channel	96271	39.37 (1000)	12.91 (328)	13.15 (334)	109.2
TD38 Sloping Channel	96275	39.37 (1000)	13.15 (334)	13.39 (340)	111.0
TD39 Sloping Channel	96278	39.37 (1000)	13.39 (340)	13.62 (346)	112.8
TD40 Sloping Channel	96286	39.37 (1000)	13.62 (346)	13.86 (352)	1 14.9
TD40 Neutral Channel	**96390**	**39.37 (1000)**	**13.86 (352)**	**13.86 (352)**	**114.4**
TD40 Outlet Channel	**96454**	**39.37 (1000)**	**13.86 (352)**	**13.86 (352)**	**114.4**
TD41 Sloping Channel	96290	39.37 (1000)	13.86 (352)	14.09 (358)	117.4
TD42 Sloping Channel	96297	39.37 (1000)	14.09 (358)	14.33 (364)	118.8
TD43 Sloping Channel	96305	39.37 (1000)	14.33 (364)	14.57 (370)	120.2
TD44 Sloping Channel	96308	39.37 (1000)	14.57 (370)	14.80 (376)	121.6
TD45 Sloping Channel	96313	39.37 (1000)	14.80 (376)	15.04 (382)	122.9
TD46 Sloping Channel	96319	39.37 (1000)	15.04 (382)	15.28 (388)	125.4
TD47 Sloping Channel	96326	39.37 (1000)	15.28 (388)	15.51 (394)	127.0
TD48 Sloping Channel	96331	39.37 (1000)	15.51 (394)	15.75 (400)	128.6
TD49 Sloping Channel	96338	39.37 (1000)	15.75 (400)	15.98 (406)	130.2
TD50 Sloping Channel	96340	39.37 (1000)	15.98 (406)	16.22 (412)	131.9
TD50 Neutral Channel	**96395**	**39.37 (1000)**	**16.22 (412)**	**16.22 (412)**	**131.4**
TD50 Outlet Channel	**96453**	**39.37 (1000)**	**16.22 (412)**	**16.22 (412)**	**131.4**
TD51 Sloping Channel	96349	39.37 (1000)	16.22 (412)	16.46 (418)	135.4
TD52 Sloping Channel	96353	39.37 (1000)	16.46 (418)	16.69 (424)	136.6
TD53 Sloping Channel	96357	39.37 (1000)	16.69 (424)	16.93 (430)	137.8
TD54 Sloping Channel	96362	39.37 (1000)	16.93 (430)	17.17 (436)	139.0
TD55 Sloping Channel	96368	39.37 (1000)	17.17 (436)	17.40 (442)	139.9
TD56 Sloping Channel	96374	39.37 (1000)	17.40 (442)	17.64 (448)	143.9
TD57 Sloping Channel	96375	39.37 (1000)	17.64 (448)	17.87 (454)	145.5
TD58 Sloping Channel	96382	39.37 (1000)	17.87 (454)	18.11 (460)	147.1
TD59 Sloping Channel	96386	39.37 (1000)	18.11 (460)	18.35 (466)	148.7
TD60 Sloping Channel	96394	39.37 (1000)	18.35 (466)	18.58 (472)	150.3
TD60 Neutral Channel	**96397**	**39.37 (1000)**	**18.58 (472)**	**18.58 (472)**	**149.4**
TD60 Outlet Channel	**96452**	**39.37 (1000)**	**18.58 (472)**	**18.58 (472)**	**149.4**

TD100 Grate

TD100 Accessories	Part No.	Length in (mm)	Invert Depth in (mm)	Weight lbs
TD900 In-line Catch Basin	96478	19.69 (500)	24.00 (610)	96.5
Type 900 Trash Bucket	01498	-	-	1.1
Foul air trap	90854	-	-	1.2
Type 824 4"–6" Outlet Adapter	95140	-	-	1.1
Flume Outlet 8" Vertical	95279	-	-	2.4
Flume Outlet Kit 8" Horizontal	95290	-	-	7.5
Flume Outlet 12" Vertical	95285	-	-	4.5
Flume Outlet Kit 12" Horizontal	95287	-	-	9.6
Closing/4" Inlet/4" Outlet cap	95063	-	-	0.4
TD204-6 6" Inlet cap	93903	-	-	4.8
TD208-6 6" Outlet cap	97048	-	9.13 (232)	4.8
TD304-6 6" Inlet cap	93905	-	-	6.1
TD308-6 6" Outlet cap	97052	-	11.50 (292)	6.1
TD100 installation device joint clamp	95286	22.25 (565)	-	3.3
TD100 installation device hanger clip	95289	-	-	0.6

Notes:
1. TraffikDrain is sold complete, i.e., channel with grate & bolts. For replacement bolts - order Part No. 95526 (bolt) and 95525 (washer).
2. Add nominal 1" (25mm) to invert depth for overall trench unit depth.
3. Preformed 4" dia. & 6" flumed drill-out outlet cast on underside of every channel (except outlet channel - 96448).
4. Closing/4" inlet/outlet cap can be cut down to suit all channels.
5. 6" Inlet & outlet caps cannot be cut to size.

Specification Summary

General

The surface drainage system shall be ACO Infrastructure TraffikDrain complete with gratings as manufactured by ACO, Inc. or equal approved.

Grates

Grates are manufactured from ductile iron to ASTM A536-84 and shall be certified to load class E600 as defined by EN 1433 or able to withstand loadings up to 2,788 psi. Trench grates feature 60% (38.92 sq. ins. per linear ft.) open area for maximum hydraulic efficiency. Each trench grate shall be permenantly fixed during manufacture, held by 2 sprung steel pins inserted horizontally through the ductile iron frame cast into the body and through the side wall of the grate. Catch basin grates are bolted in place but removeable for maintenacne purposes.

Installation

The trench drain system shall be installed in accordance with the manufacturer's installation instructions and recommendations.

Materials

The trench system bodies shall be manufactured from polyester polymer concrete with minimum properties as follows:

- Compressive strength: 14,000 psi
- Flexural strength: 4,000 psi
- Water absorption: 0.07%
- Frost-proof
- Salt-proof - Compliant with B117 Salt Spray Test
- Dilute acid and alkali-resistant

The nominal clear opening shall be 4.00" (100 mm) with overall width of 6.38" (162 mm). Modular units shall be manufactured with either an invert slope of 0.6% or with neutral invert and have a wall thickness of at least 0.67" (16 mm). Each unit will feature a full radius in the trench bottom and a male to female interconnecting end profile. Units shall have horizontal cast-in anchoring features on the outside wall to ensure maximum mechanical bond to the surrounding bedding material and pavement surface. The ductile iron edge rail will be integrally cast in by the manufacturer to ensure maximum homogeneity between polymer concrete body and edge rail. Each edge rail shall be at least 0.25" (6 mm) thick.

EN1433 Load Class E
134,885 lbs – 2,785 psi

ACO, Inc.

© January 2026 ACO, Inc.
All reasonable care has been taken in compiling the information in this document. All recommendations and suggestions on the use of ACO products are made without guarantee since the conditions of use are beyond the control of the company. It is the customer's responsibility to ensure that each product is fit for its intended purpose and that the actual conditions of use are suitable. ACO, Inc. reserves the right to change products and specifications without notice.

info@acousa.com
www.acousa.com